Petr Kadaník *

NFO RIADENIE OTÁČOK ASYNCHRÓNNEHO MOTORA BEZ POUŽITIA MECHANICKÉHO SNÍMAČA RÝCHLOSTI

NFO SPEED CONTROL OF INDUCTION MOTOR WITHOUT SHAFT ENCODER

V príspevku je popísaný systém riadenia asynchrónneho motora bez použitia mechanického snímača polohy či otáčok rotora. Riadiaci systém je založený na princípe tzv. prirodzeného riadenia (natural field orientation -NFO). Táto metóda umožňuje určiť aktuálnu pozíciu priestorového vektora magnetického poľa vo vnútri motora, čo je predpoklad pre jeho vektorové riadenie, len zo známych statorových napätí a prúdov. Všetky výpočty veličín potrebných pre otáčkovú reguláciu sú vykonávané na základe matematického modelu asynchrónneho stroja. Tiež sú prezentované výsledky simulácie navrhnutého systému a pokusné realizácie na mikroprocesorovo riadenom elektrickom pohone s IGBT striedačom.

This article focuses on the design and analysis of a speed-sensorless vector control of induction motor based upon a Natural Field Orientation (NFO). This method allows high-dynamic vector control of PWM VSI fed induction motor. The main merit of NFO is given by no requirement on any speed or position sensor. The presence of a tacho-generator or optical shaft encoder is commonly undesirable. These transducers significantly increase the costs and reduce the reliability and robustness of the overall system. The NFO method doesn't employ computationally extensive algorithms such as Model Reference Adaptive System or methods based on Kalman filter. Simulation results from a model-based computer-aided design approach using MATLAB/SIMULINK software will be presented.

1. Introduction

Induction motor (IM) enjoys many advantages over DC motor, including better power to weight ratio, lower inertia and costs (fewer maintenance requirements). Unfortunately, IM has a nonlinear and a highly interactive multivariable control structure which presents an involved control task. However, the dynamic behaviour of IM can be viewed in a manner analogous to DC motor provided the machine is modelled in an appropriate manner and decoupled control of torque and flux current components can then be achieved. Such control is termed vector or field-oriented control, and its implementation allows the IM to develop dynamic operating characteristics comparable to a DC motor.

With vector control, the object is to control IM in the same way as DC motor, and thus obtain their good dynamic response. DC machines essentially have stationary and orthogonal field and armature fluxes. Vector controllers develop similar flux components in a rotating 2-axis ($d - q$) coordinate system. These two components maintain orthogonality and are controlled independently in all situations by control of their corresponding stator current components.

To realise such control, a mathematical transformation is used to represent the 3-phase stator currents in an equivalent rotating 2-axis co-ordinate system. In 3-phase form, the stator currents (i_a, i_b, i_c) are stationary in space with directions defined by the stator windings along $a - b - c$ axes. Once in space phasor form, it is convenient for IM analysis to express the phasor in terms of 2-axes rather than the original 3. A stationary 2-axis reference frame is represented by windings α and β. In rotating 2-axes form, the stator currents are resolved into direct (d) and quadrature (q) axis components with the d-axis fixed to the machine flux (Fig. 1). Hence the $d - q$ axes rotate in space at synchronous speed.

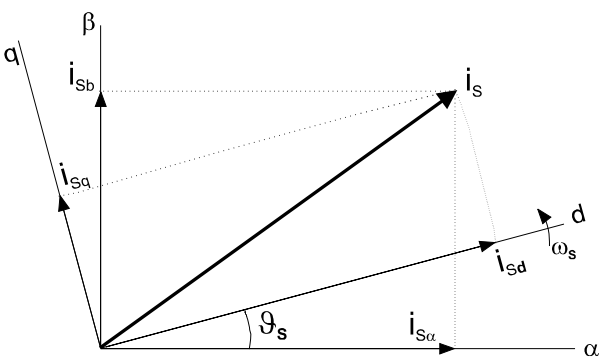

Fig. 1 Stator current vector i_s a his components in stationary (α - β) and in rotating (d - q) 2-axes reference frame

With stator currents in $d - q$ form, the torque expression of the IM is analogous to that of the DC machine. For the DC

* **Ing. Petr Kadaník**
Department of Electrical Drives & Traction, Czech Technical University, Faculty of Electrotechnical Engineering, Technická 2, Prague 6, Czech Republic, Phone: +420-2-2435 2812, Fax: +420-2-311 99 72, e-mail: kadanik@feld.cvut.cz

machine, the torque $M \approx I_f I_a$; where the field current I_f can be held constant, and the armature current I_a is used to control machine torque. For IM, $M \approx I_d I_q$; where the d-axis current I_d corresponds to field current I_f, and the q-axis current I_q corresponds to armature current I_a. Control of I_d and I_q therefore allows DC machine performance to be obtained from induction machines.

The transformation from stationary ($\alpha - \beta$) reference frame to synchronously rotating ($d - q$) reference frame (and the inverse from $d - q$ to $\alpha - \beta$) requires the instantaneous angular position ϑ_s of the machine flux (hence the d-axis) with respect to the reference stator winding.

It is difficult to detect motor flux and, therefore, it is usually calculated in a mathematical model from measured stator currents and rotor speed. In such a case, the IM must be equipped with a speed sensor.

However, speed or position sensor still represents a considerable part of the total costs of the electrical drive. Moreover, the robustness of the system is also reduced by this sensor. In a large majority of industrial applications, inverter-fed AC drives with standard IM are used. These drives operate with a simple open-loop control and don't require any mechanical sensor. However, they are only suitable for applications demanding low dynamic performance.

2. Principle of NFO

The basics of Natural Field Orientation (NFO) were firstly introduced by Ragnar Jönsson from Sweden and patented as *"Method and apparatus for controlling an AC induction motor by indirect measurement of the air gap voltage"* in 1994.

NFO is based on the same elementary theory and ideas as vector control. However, the problem of keeping track of the magnetic field position has been solved in a "natural" way. The control system does not try to measure or estimate the magnetic field. Instead, it assumes that the motor will generate a proper magnetic field as long as it gets correct control signals[2]. The main assumption for getting correct control is to maintain magnetic flux constant. If this simple requirement is fulfilled there will always be correct field orientation.

A simple equation for induced (or back-emf) voltage can be obtained from modified equivalent IM's circuit [1]: $U_i = j\omega_s L_m I_m$ (evident DC machine analogy). It is obvious that the quotient U_i/ω_s should be kept constant because this will keep the amplitude of I_m constant, too. This condition is satisfied by estimating voltage U_i and making the frequency ω_s proportional to U_i. Motor flux angular position is then achieved by ω_s integration. This knowledge is the basis for NFO control. The simplified NFO control scheme is shown in Fig. 2.

The induced voltage U_i cannot be measured directly because it exists inside the motor. But it is possible to measure the terminal voltage U_S and the stator current I_S and then calculate U_i according to Ohm's law. This is made in the stator-fixed ($\alpha - \beta$) coordinates. The results of the measuring and calculation are a rotating vector of induced voltage U_i, which is immediately transformed to field coordinates ($d - q$). In the field coordinates the induced voltage components U_{id} and U_{iq} are DC voltages. For the calculation of synchronous speed ω_s, only quadrature component U_{iq} is used because U_{id} should be zero if the parameters of the motor model are set correctly (see diagram on Fig. 3).

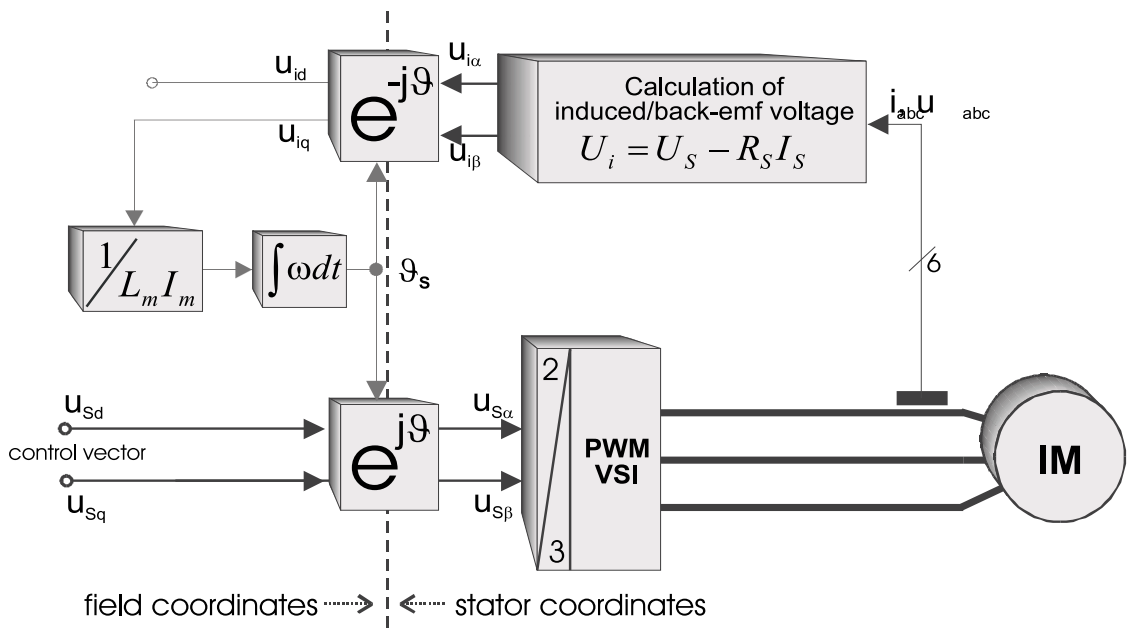

Fig. 2 Simplified NFO Control scheme

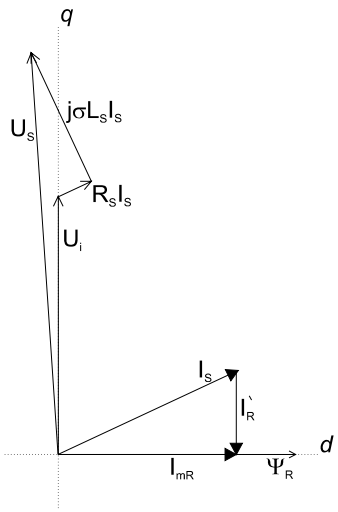

Fig. 3 Phasor diagram for Fig. 4

3. Induction motor model

An induction motor, under simplifying assumptions, may be described by a set of non-linear equations. In our case, it is suitable to use the equations in the rotor-flux reference frame $(d - q)$.

The rotor flux reference frame rotates at speed ω_s (and angle ϑ_s) with respect to the stator reference, and the d-axis is fixed to the rotor flux space phasor Ψ_R. Then Ψ_{Rq} must be zero, and

$$-_R = \Psi_{Rd} + j\Psi_{Rq} = \Psi_{Rd} \tag{1}$$

The equivalent rotor magnetising current i_{mR} is defined as [1]

$$i_{mR} = i_S + \frac{L_R}{L_m} i_R = \Psi_{Rd} \frac{L_R}{L_m} \tag{2}$$

according to the modified equivalent circuit of IM (Fig. 4). Space relations between the quantities of the equivalent circuit are shown in Fig.3.

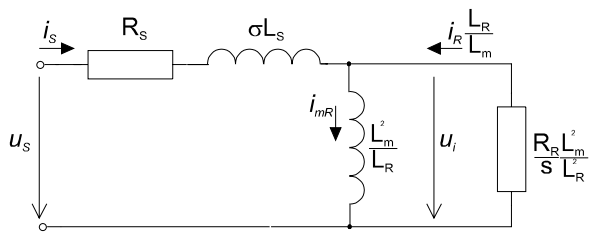

Fig. 4 Modified equivalent circuit of IM

Then the IM's voltage equations in the rotor flux reference frame can be written as

$$u_{Sd} = R_S i_{Sd} + \sigma L_S \frac{di_{Sd}}{dt} - \omega_s \sigma L_S i_{Sq} + (1 - \sigma) L_S \frac{di_{mR}}{dt} \tag{3}$$

$$u_{Sq} = R_S i_{Sq} + \sigma L_S \frac{di_{Sq}}{dt} + \omega_s \sigma L_S i_{Sd} + (1 - \sigma) L_S \omega_s i_{mR} \tag{4}$$

$$0 = \frac{R_R}{L_R} L_m (i_{mR} - i_{Sd}) + L_m \frac{di_{mR}}{dt} \tag{5}$$

$$0 = -\frac{R_R}{L_R} L_m i_{Sq} + (\omega_s - \omega) L_m i_{mR} \tag{6}$$

The developed electromagnetic torque of IM with p_p poles pairs is given by

$$m_i = \frac{L_m}{L_R} p_p \Psi_{Rd} i_{Sq} \tag{7}$$

The following equations for back-emf voltage U_i can be written

$$u_{id} = u_{Sd} - R_S i_{Sd} - \sigma L_S \frac{di_{Sd}}{dt} + \omega_S \sigma L_S i_{Sq} \tag{8}$$

$$u_{iq} = u_{Sq} - R_S iS_q - \sigma L_S \frac{di_{Sq}}{dt} - \omega_S \sigma L_S i_{Sd} \tag{9}$$

Comparing eq.(3, 4) and (8, 9) gives (with simplified assumption: $i_{mR} = const$, $\sigma = 0$) expression for stator frequency calculation

$$\omega_S = \frac{u_{iq}}{(1 - \sigma) L_S i_{mR}} = \frac{u_{Sq} - R_S i_{Sq}}{L_S i_{mR}} \tag{10}$$

For rotor speed, with using eq. 5, 6 and 10, it can be written

$$\omega = \frac{u_{iq} - R_R i_{Sq}}{L_S i_{mR}} \tag{11}$$

The block scheme shown in Fig. 2 represents the NFO computing core executing the rotor speed ω and the rotor flux position ϑ_s calculation. This scheme uses measured stator currents and voltages ($i_{S\alpha}$, $i_{S\beta}$, $u_{S\alpha}$, $u_{S\beta}$) in stator reference frame and q-component of stator current in rotor flux reference frame and magnetising current i_{mR} from a superior control system as input values.

4. Speed control with estimated speed signal

The rotor speed and motor flux angular position are estimated using the NFO computing core, and it is introduced into a standard rotor field oriented control system with induction machine.

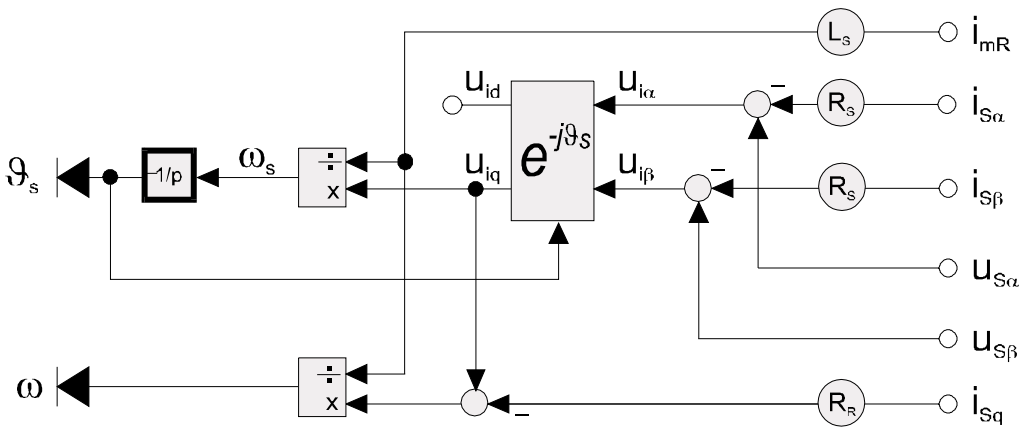

Fig. 5 NFO Computing Core

Feedback magnetising current signal i_{mR} is estimated using equation (5). PI controllers are used for speed and currents control loops.

The electrical signals serving as input to the NFO Control in Fig. 6 are the stator voltages and currents as represented by the orthogonal set $u_{S\alpha}$, $u_{S\beta}$, $i_{S\alpha}$, $i_{S\beta}$ of AC quantities. The flux is set as a reference quantity i_{mR}^*, that may be subject to change for field weakening.

Executing the integration of ω_s (to get flux angle) in field coordinates reduces the effect of integrator drift at low stator frequency to a normal offset that is common with analogue signal processing.

5. Simulation Results & Conclusions

The proposed algorithm was verified by computer simulation (MATLAB/Simulink) and it was found to perform well in both transient and steady states.

For the simulation the MATLAB/Simulink software was used. The parameters of induction motor were: P_n = 4 kW, U_n = 220 V, I_n = 9.2 A, R_S = 1.25 Ω, R_R = 1.32 Ω, $L_S = L_R$ = 0.136 H, L_m = 0.12 H, M_n = 40 Nm, p_p = 3, n_n = 960 rpm.

In Fig. 7 starting, reversing and loading transients for 4 kW IM are presented.

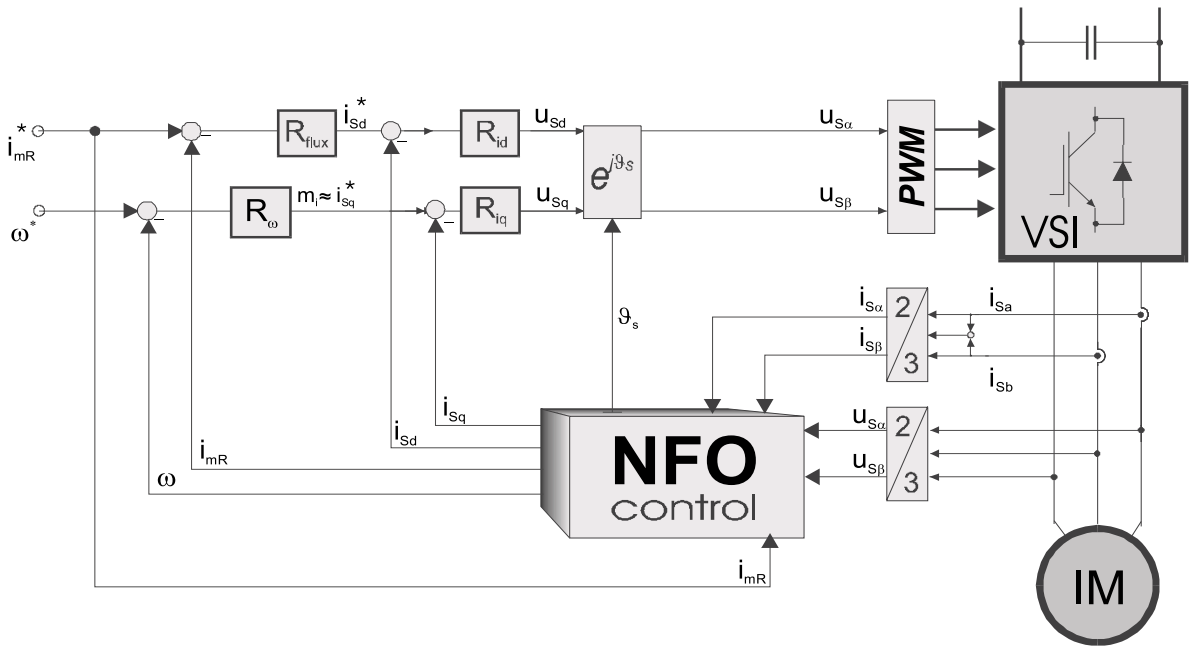

Fig. 6 Proposed scheme for speed-sensorless control of IM based on NFO algorithm

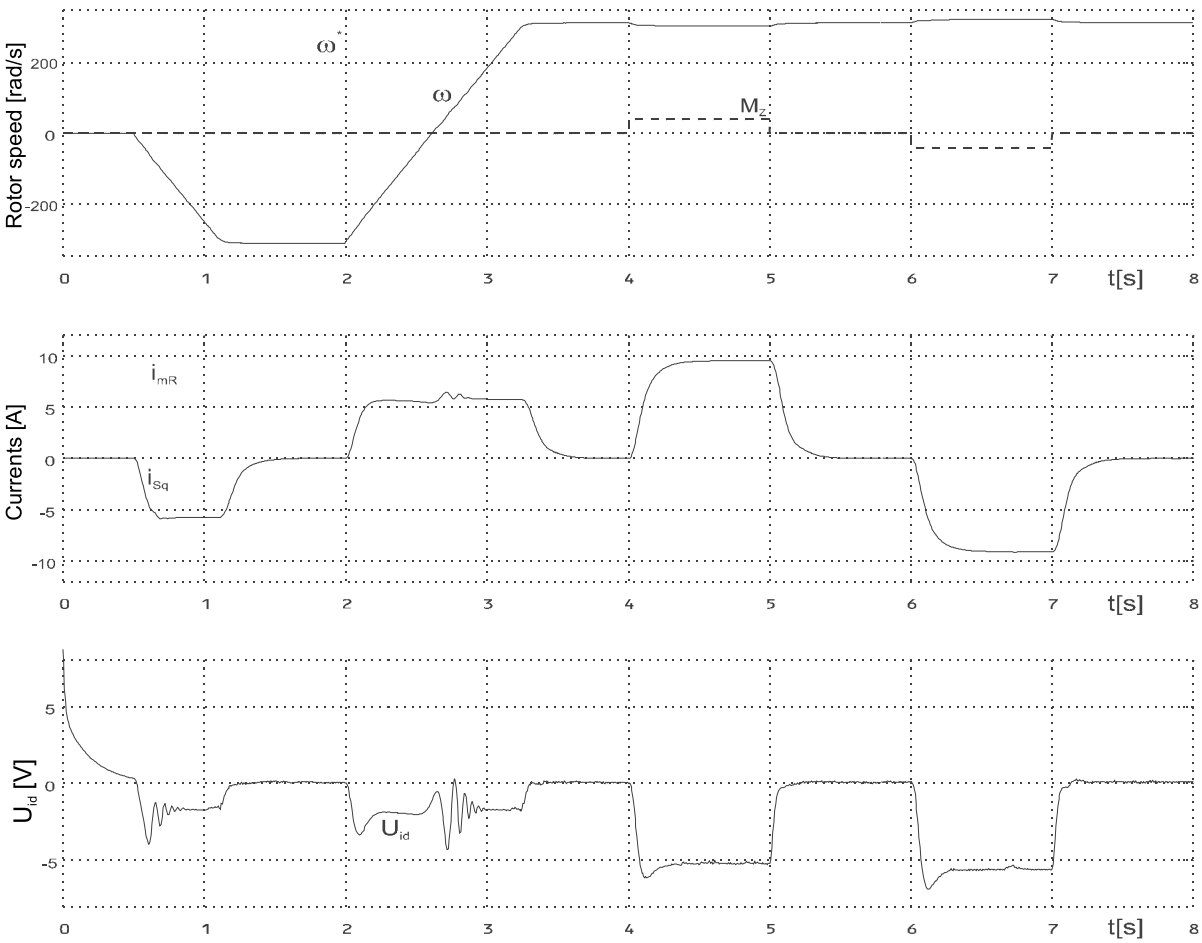

Fig. 7 Simulation results for 4 kW Induction motor

The U_{id} deviation from zero value (see the 3-rd graph in Fig. 7) can be integrated with a relatively long time constant and used as a compensating signal for the stator resistance parameter in motor model.

The basic NFO Control version used for simulation in this paper may be augmented in various ways for attaining still higher levels of accuracy and performance.

6. Proposed experimental structure

The aims of the next steps will include the finishing brand new 3-phase IGBT inverter.

For this purpose the integrated intelligent IGBT module MiniSkiip 82AC06 and IGBT driver SKHI60 Semidriver manufactured by SEMIKRON. Stator currents measuring is done by LEM LTS 25-NP. The information of the stator voltages can be obtained by measuring (voltage transformers, LEM LV 25-P) or by reconstruction from the sensed pulses width of PWM voltage on the terminals (TTL signal) and measured DC-link voltage UD.

NFO Control algorithm will be implemented firstly using NFO Controller DemoBoard (based on INTEL87C196MC) - see Fig. 8 - and then using Texas Instruments DSP TMS320F240.

References

[1] NOVOTNY, D. W. - LIPO, T. A.: Vector Control and Dynamics of AC Drives, New York 1996

[2] JÖNSSON, R.: Natural Field Orientation (NFO) Provides Sensorless Control of AC Induction Servo Motors, PCIM Magazine, June 1995

[3] JÖNSSON, R. - LEONHARD, W.: Control of induction motor without a Mechanical sensor based on the principle of Natural Field Orientation, IPEC '95, April 1995, Yokohama

Reviewed by: M. Žalman, B. Dobrucký

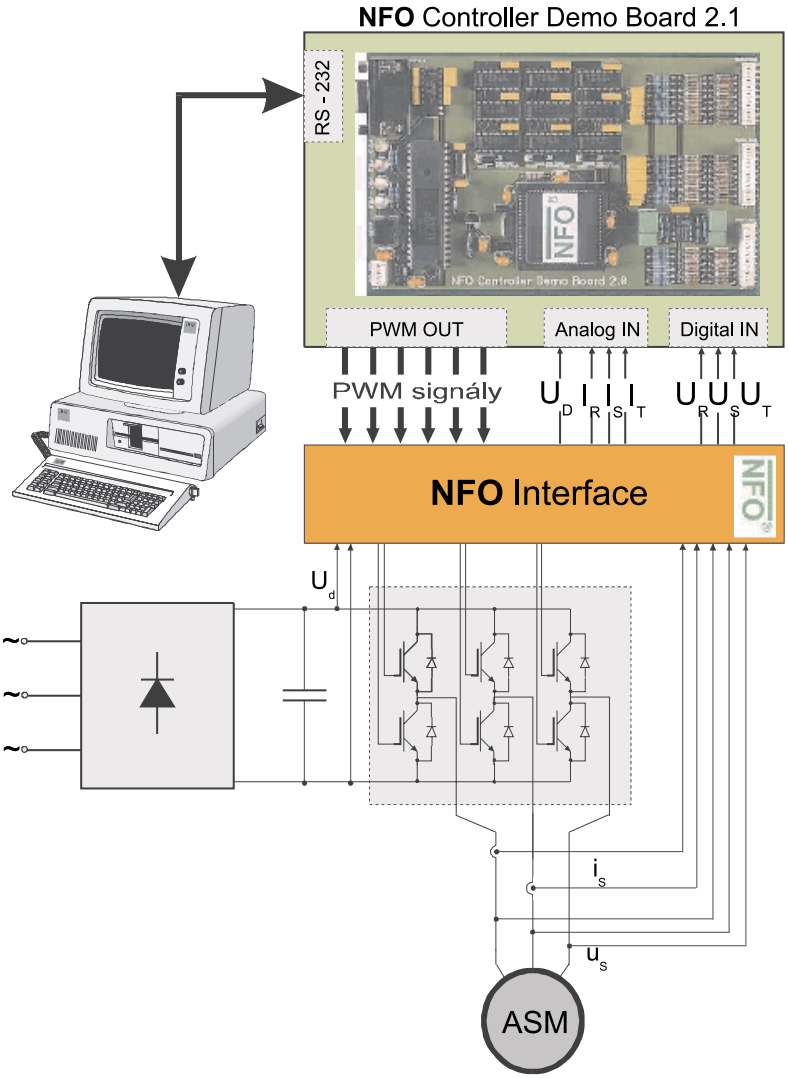

Fig. 8 Proposed experimental workstation